ORDER #:
PO #:
JERSEY MESH DRAWSTRING BACKPACK
#JDB-300 NORMAL SHAPE
14" X 17"
WHITE DRAWSTRINGS
MATERIAL: 140G JERSEY MESH

IMPRINT COLORS:

- [ ] PMS
- [ ] PMS

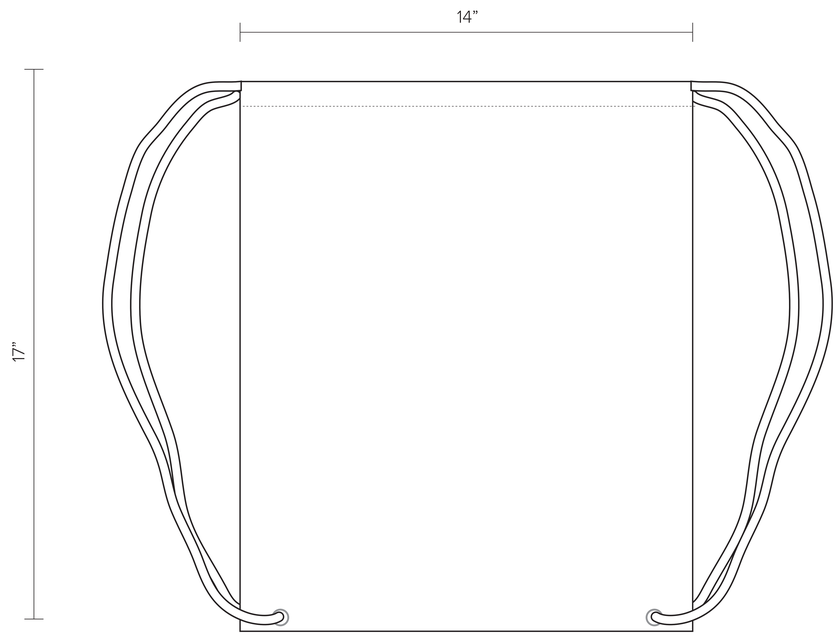

FRONT

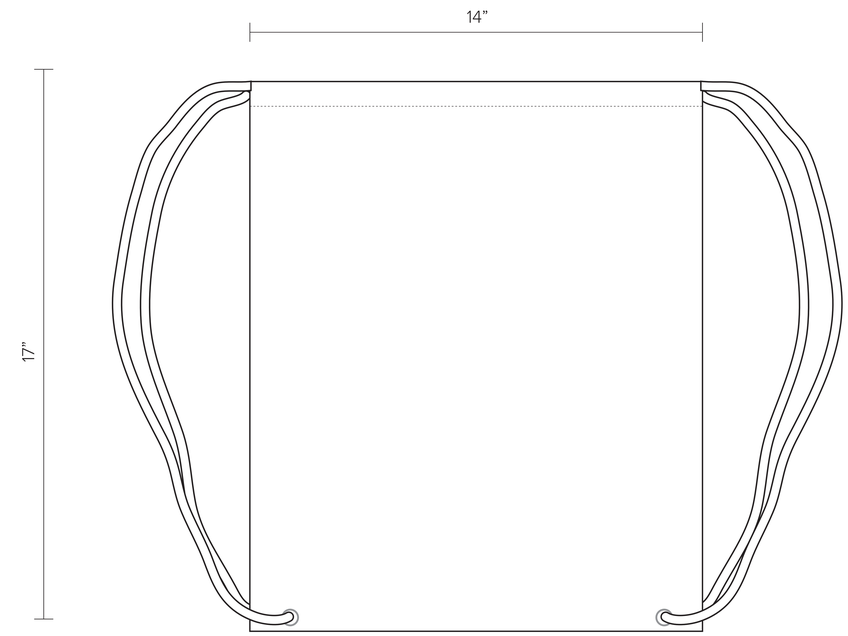

BACK