**ORDER #:**
**PO #:**
**JERSEY DRAWSTRING BACKPACK (FOOTBALL)**
#JDB-200
SIZE: 17” X 16.5”
WHITE DRAWSTRINGS
MATERIAL: 210D NYLON

IMPRINT COLORS:

- FULL COLOR
- PMS
- PMS
- PMS

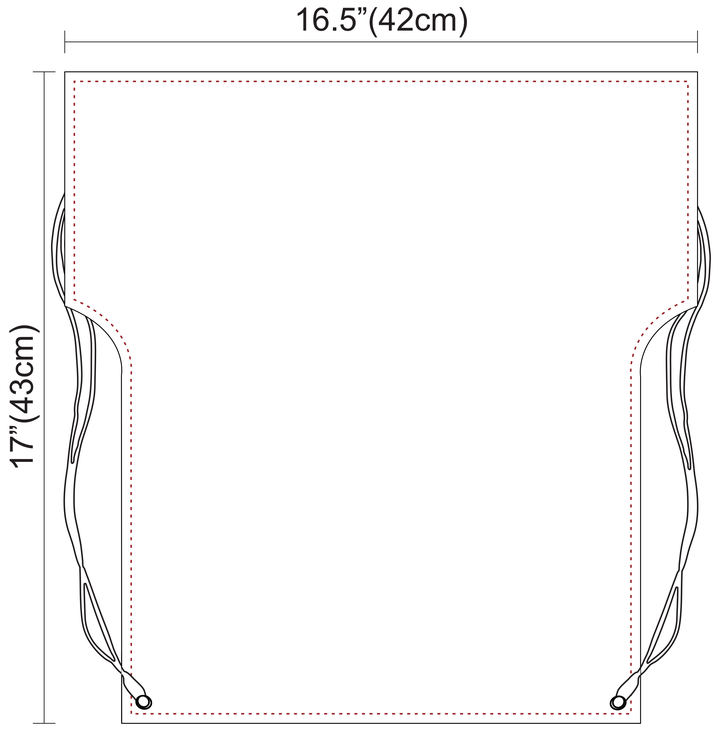


Front

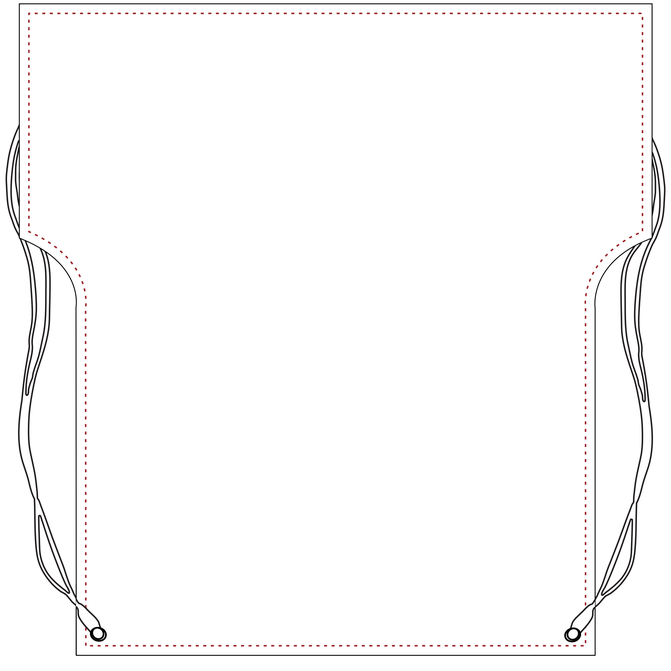

Back

LOGO PRINTING LINE

CUTTING LINE